TV-LED1000
TV-LED1000H

(Beam+Spot+Beam+Framing Shutters)

www.vltglight.com

Optical system

Light Source：OSRAM LED 850W Module

Color temperature：7500、8500K

Life time：≥20000hours

CRI:1200≥70/1200H≥90

Luminous lux: 30000lm

Movement

X:540°（16 bit precision scan）

Y:270°（16 bit precision scan）

Automatic error correction reset function

Color system

Linear CMY color mixing + Linear CTO color correction

1 Color wheel: 6color+white, Half-color effect, color can be positioned arbitrarily, rainbow effect with two-way rotation

Gobo system

1 fixed gobo wheel: 8 pattern filter + white

1 rotating gobo wheel: 6 gobos + white , Pattern jitter and pattern arbitrary positioning function.

Framing shutters

4x fast and smooth framing shutters, each individually controllable, and the entire framing module can be rotated at 90°

Effect

Zoom angle : 5.5°- 52°

2 prism wheel: 5th-order strip prism + 4 prism, positive and negative rotation,has a prism positioning function, 16 macro functions

2 Atomization: light atomization, heavy atomization

Iris: 0%-100% linear adjustment

Dimming: 0-100% linear dimming

Strobe: up to 25Hz, you can choose random strobe or pulse strobe

IP Rated/Environment temperature

IP20 -10℃- 45℃

Display

Display: Rechargeable battery , Chinese and English languages can be switched, the display can be reversed 180°

Reset detection: With out DMX signal, manual detection and automatic detection can be selected to facilitate inspection and maintenance.

Controls and procedures

Control mode: DMX512, Art-net, RDM, SACN

Control channel: 37/53

Input signal isolation protection function

Wireless DMX512 control (optional)

Can be upgraded via DMX data line, or SACN remote upgrade

Can change the DMX address code, machine reset and other functions from the console

Electrical parameters

Voltage: AC90-264V, 50/60Hz

Power: 1195W (90V)

Size and weight

Product Size：791*423*271mm

Packing size (carton)： 617*600*450

Net weight: 35kgs

Gross weight (carton): 38kgs

Animation

High CRI

Framing

Color:

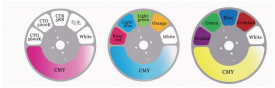

Rot Gobo:
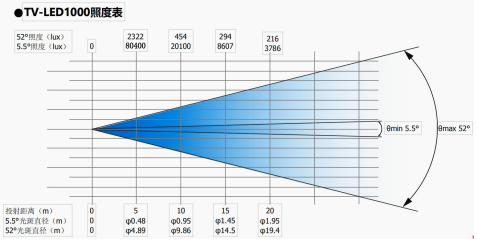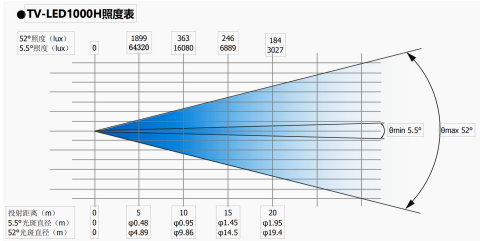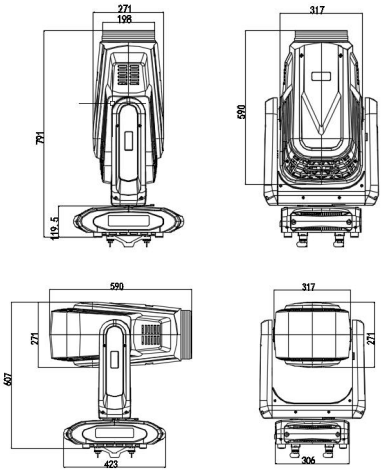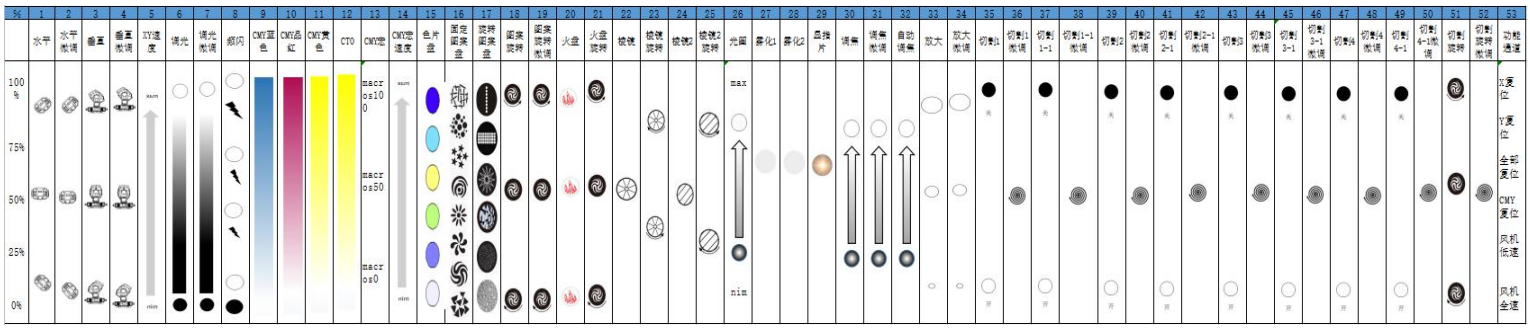
Gobo: