TV-LED750
TV-LED750H

(Beam+Spot+Beam+Framing Shutters)

http://vltglight.com

Optical system

Light Source:640W White LED Module

Color temperature：7500K

Life time：≥20000hours

CRI:750≥70/750H≥90

Movement

X:540°（16 bit precision scan）

Y:270°（16 bit precision scan）

Automatic error correction reset function

Color system

Adjustable high and low CRI

Linear CMY color mixing + Linear CTO color correction

1 Color wheel: 6color+white, Half-color effect, color can be positioned arbitrarily, rainbow effect with two-way rotation

Gobo system

1 fixed gobo wheel: 8 pattern filter + white

1 rotating gobo wheel: 6 gobos + white , Pattern jitter and pattern arbitrary positioning function.

Framing shutters

4x fast and smooth framing shutters, each individually controllable, and the entire framing module can be rotated ±45°

Effect

2 prism wheel: 6th-order strip prism + 4 prism, positive and negative rotation,has a prism positioning function 2 high brightness atomized sheets (light/medium) of active type material, can be cut into and stacked respectively

Iris: 5%-100% linear adjustment

Dimming: 0-100% linear dimming

IP Rated/Environment temperature

IP20 -10℃- 45℃

Display

Display: LCD display, rechargeable battery , Chinese and English languages can be switched, the display can be reversed 180°

Reset detection: With out DMX signal, manual detection and automatic detection can be selected to facilitate inspection and maintenance.

Controls and procedures

Control mode: DMX512, Art-net, RDM, SACN

Control channel: 37/53

Input signal isolation protection function

Wireless DMX512 control (optional)

Can be upgraded via DMX data line, or SACN remote upgrade

Can change the DMX address code, machine reset and other functions from the console

Factory configuration

The instructions, power cord and insurance rope.

Electrical parameters

Voltage: AC100-240V, 50/60Hz

Power: 865W (90V)

Size and weight

Product Size：728*400.5*263.9 mm

Net weight: 29.8kgs

Animation

CMY+CTO

Framing

High CRI

Color:

Rot Gobo:
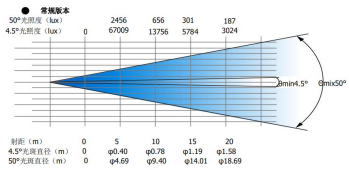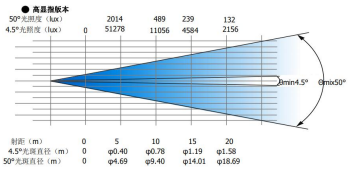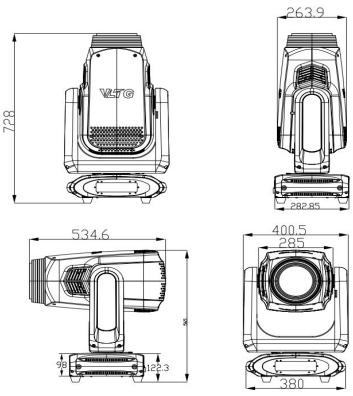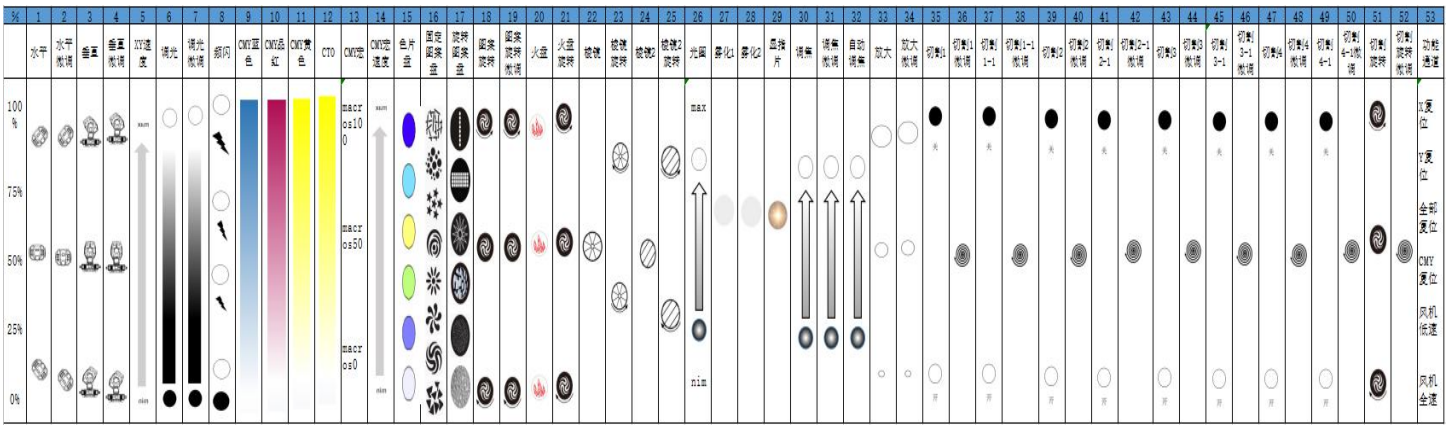
Gobo: