TV-NE380

www.vltglight.com

Optical system

Light Source:OSRAM SIRIUS HRI ® 371W S

Color temperature：7800K

Light source life：≥1500hours

Scan

X:540°（16 bit precision scan）

Y:270°（16 bit precision scan）

Automatic error correction reset function

Color system

1 color wheel: 12 color +4color effect+ white, half-color effect, rainbow effect with bidirectional rotation.

Gobo system

1 fixed pattern plate: 14 pattern pieces + white, with pattern dithering and pattern arbitrary positioning function.

Prism system

Prism 1: 8prisms.　　Prism2: 24 prisms.

2 prisms can be stacked

Effect

Focusing angle：1.8°

Atomization：Independent atomization

Dimming：0-100% linear dimming.

Strobe: up to 25Hz, can choose random strobe or pulse strobe.

Environment

IP20

-10℃- 45℃

Display

Display:usb /RDM, you can enter the menu to set without powering on. The Chinese and English languages can be switched, and the display can be reversed 180 °, which is convenient for hanging upside down.

Reset detection: When there is no DMX signal, manual detection and automatic detection can be selected to facilitate inspection and maintenance.

software

9 built-in programs to choose from

Upgrade via DMX data cable

Can change the DMX address code from the console, remote control switch bulb, machine reset and other functions

Display lamp and light source usage time

2 channel modes:16/13 channels

Control

High temperature automatic protection

Standard DMX512 protocol

DMX shortcut interface

RDM function

Electrical parameters

Voltage: AC90-264V, 50/60Hz

Power: 550W

Size and weight

Product Size：192.5*313.1*255mm

Packing size (carton)：730*430*540

Net weight: 14kgs

Gross weight (carton): 15.5kgs

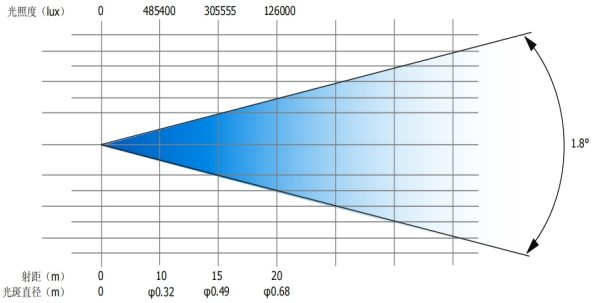

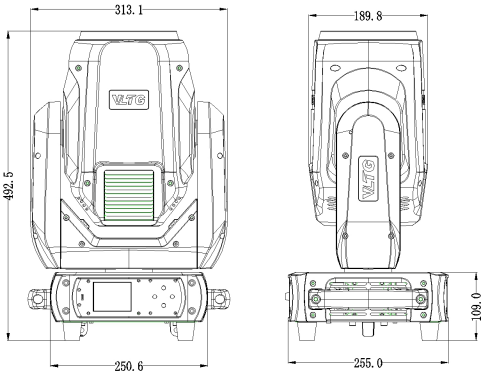

Color :
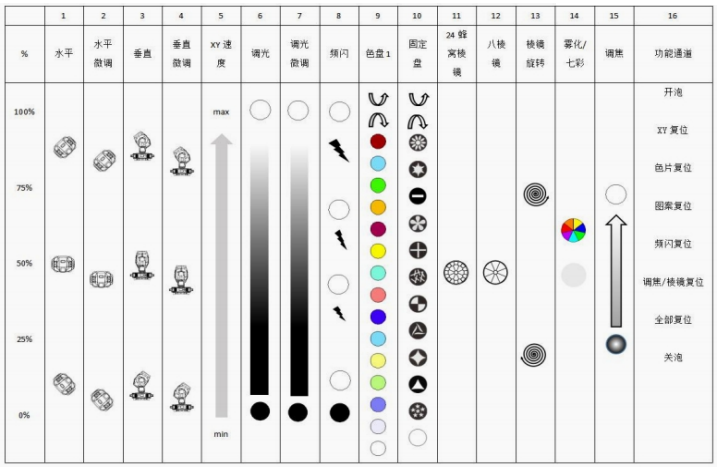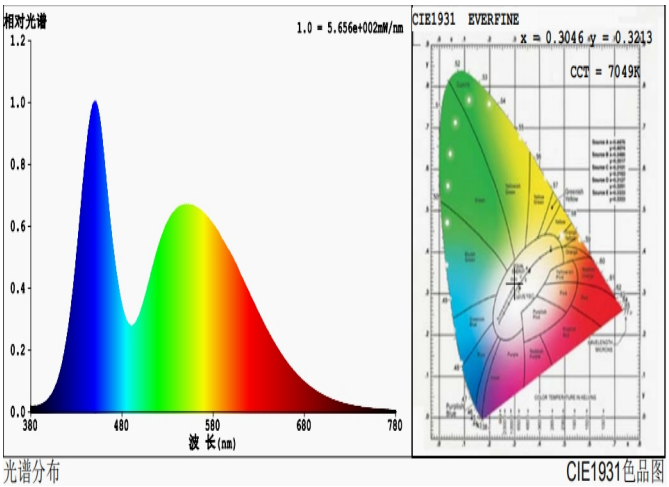
Gobo：